ECLIPSE

FABRICS

ART PU CATEGORY A
FLOWER CATEGORY A
LIDO CATEGORY B
MINA CATEGORY B
SUNDAY CATEGORY B
VICO CATEGORY A

See pages 81- 92 to see the full range of fabrics

Sofa
Small
Cat B Fabric C121520001
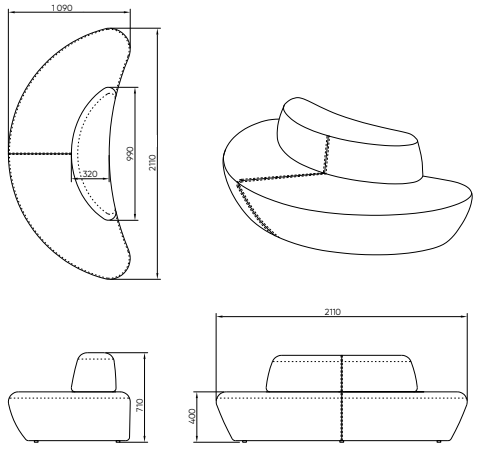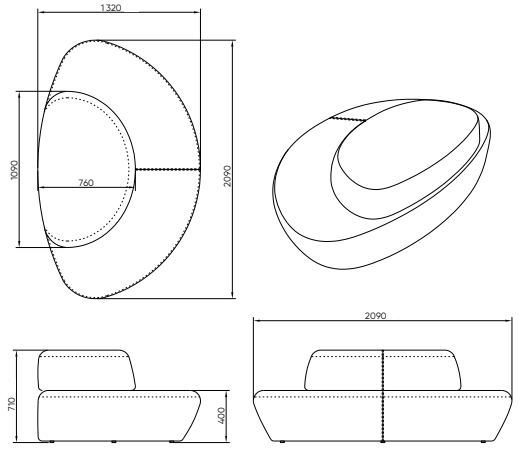
Sofa
Large
Cat B Fabric C121520005